Electrolux PROFESSIONAL

Handling System Sorting Table Left to Right, 1000x800mm

ITEM #

MODEL #

NAME #

SIS #

AIA #

865335 (BHST1008L) Sorting table, Left>Right, 1000x800 mm

Short Form Specification

Item No.

Constructed in 304 AISI stainless steel. N. 4 square 40x40mm square legs on height-adjustable feet. Underframe on three sides.
1-tier overshelf for baskets. N. 1 waste scraping hole with rubber ring. Attachment to infill tops or slide conveyors on the right side. Basket direction: from left to right.

APPROVAL:

Construction

- All surfaces smooth with polished finish.
- Receiving tabletop with raised side edges all-round, reduces the possibility of crockery being pushed off the table.
- Constructed in AISI 304 stainless steel with square 40x40mm legs.
- Sorting table provided with an over-shelf for dishwashing racks which can be inclined at either the dishwashing or receiving side.
- One or two waste holes with a rubber scraping ring tabletop.

Sustainability

- Optional extras: plain tray slider, cutlery chute or additional scraping hole.

Optional Accessories

- Dish scraper PNC 855297 ❑
- Shelf for Plates and baskets, 1000 mm PNC 865375 ❑
- Tray slide for sorting table, 1000 mm PNC 865379 ❑
- Cutlery chute to install on tray slide PNC 865383 ❑
- Floor fastening kit for 2 square legs PNC 865386 ❑
- Removable bridge table, 800 mm PNC 865418 ❑
- Removable bridge table with hole, 800 mm PNC 865419 ❑

Handling System
Sorting Table Left to Right, 1000x800mm

Key Information:

External dimensions, Width:	
865335 (BHST1008L)	1000 mm
External dimensions, Depth:	800 mm
External dimensions, Height:	1551 mm
Net weight:	8 kg

Front

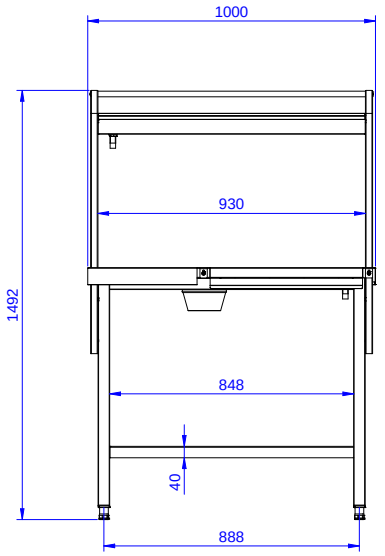

Side

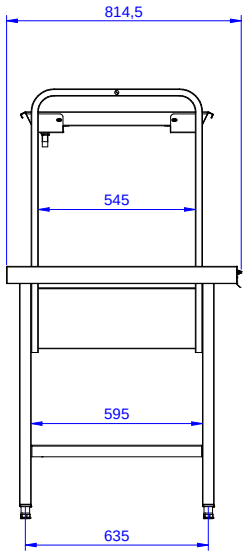

Top

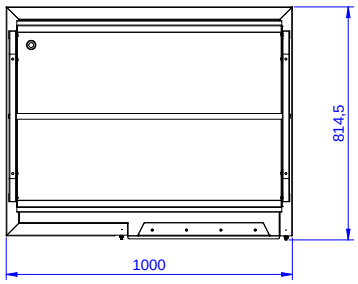

Handling System
Sorting Table Left to Right, 1000x800mm

The company reserves the right to make modifications to the products without prior notice. All information correct at time of printing.

2024.10.09